JELD-WEN WINDOWS & DOORS

ASSEMBLY AND INSTALLATION INSTRUCTIONS
for Builders Aluminum Patio Doors with Nailfin (JII009)

Thank you for selecting JELD-WEN products. Attached are JELD-WEN's recommended assembly and installation instructions for Builders Aluminum Sliding Patio Doors with integral nailing fin. Read these installation instructions thoroughly before beginning. They are designed to work in most existing applications. However, existing conditions may require changes to these instructions. If changes are needed, they are made at the installer's risk. For installations other than indicated in these instructions, contact a building professional.

Newer construction methods have led to an increase in air and water tightness in buildings. This frequently leads to negative air pressure inside the home, which can draw water through very small openings. Our installation method seals the patio door to the weather barrier (typically building wrap) and uses a sill pan to capture and drain incidental storm water from under the patio door.

IMPORTANT INFORMATION & GLOSSARY

Consult your local building code official for applicable building codes and regulations. Local building code requirements supersede recommended installation instructions.

Note! Installation such that the sill is higher than 35 feet above ground level or any product installation into a wall condition not specifically addressed in these instructions must be designed by an architect or structural engineer. Failure to install square, level and plumb and on a flat surface (without peaks and valleys) could result in denial of warranty claims for operational or performance problems.

Note to Installer: Provide a copy of these instructions to the building owner. By installing this product, you acknowledge the terms and conditions of the limited product warranty as part of the terms of the sale.

Estimated Install Time for New Construction	
	First Time: 1½ hr
	Experienced: ¾ hr
	Professional: ½ hr

Please allow sufficient time to properly prepare the rough opening, install the patio door and ensure its proper operation. Professional installation assistance is recommended.

GLOSSARY

Backer Rod (backing material)
A material (e.g. foam rod), placed into a joint primarily to control the depth of the sealant.

Pilot Hole
A drilled hole that is no larger than the body of the screw (minus the threads).

Shiplap
The layering method in which each layer overlaps the layer below it so that water runs down the outside.

Step-down Landing
A patio door sill in which the interior floor surface is higher than the exterior surface.

Weep Hole (weep channel)
The visible exit or entry part of a water drainage system used to drain water out of a door.

REVERSE PATIO DOOR HANDING

Door kits are set up for left to right operation (XO) when viewed from the exterior. To reverse the handing (OX), move the door rollers to the top and flip the operating panel over before installation.

LANDINGS

These instructions cover two patio door sill conditions: the **step-down landing** and the **continuous slab landing**. The installation methods vary slightly between landing types.

Step-Down Landing

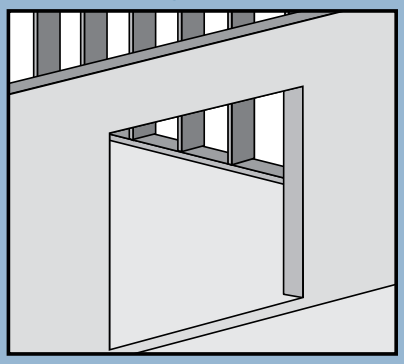

Continuous Slab Landing

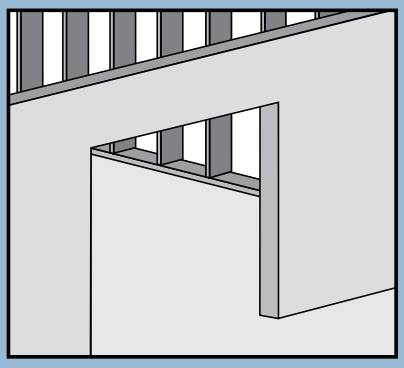

ROUGH OPENINGS

This installation guide specifically addresses sheathed wall and open-stud construction.

FULLY SHEATHED WALL CONSTRUCTION

The wall framing is covered by sheathing and the door will be mounted with the nailing fin flush against the sheathing.

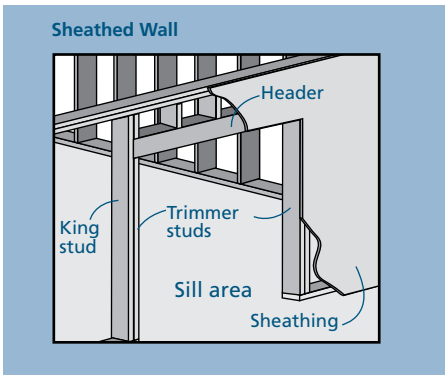

OPEN-STUD CONSTRUCTION

The wall framing needs to be covered by backing support before the patio door can be installed. The door will be mounted with the nailing fin flush against the applied backing support.

This backing support should be a non water-degradable, thin (max. 1/8" thick) sheet material such as vinyl sheeting. Completely surround the rough opening with the backing support as shown. Backing support must be applied before building wrap.

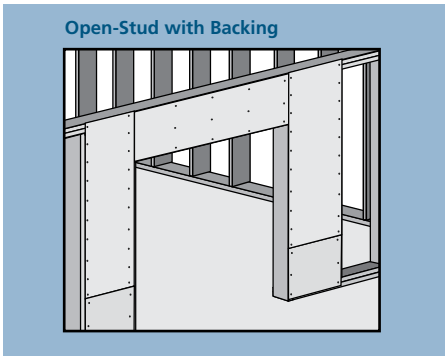

SAFETY & HANDLING

SAFETY

- Read and fully understand ALL manufacturers' instructions before beginning.
- Do not work alone. Two or more people are required. Use safe lifting techniques.
- Use caution when handling glass. Broken or cracked glass can cause serious injury.
- Wear protective gear (e.g. safety glasses, gloves, ear protection, etc.).
- Operate hand/power tools safely and follow manufacturer's operating instructions.
- Use caution when working at elevated heights.

IF INJURY OCCURS, IMMEDIATELY SEEK MEDICAL ATTENTION!

MATERIALS AND PATIO DOOR HANDLING

- Heed material manufacturers' handling and application instructions.
- Protect adhesive surfaces from dirt, moisture, direct sunlight and folding over onto themselves.
- Handle in vertical position; do not drag on floor.
- Do not put stress on joints, corners or frames.
- Store door in dry, well-ventilated area in vertical, leaning position to allow air circulation; do not stack horizontally.
- Protect from exposure to direct sunlight during storage.
- Install only into vertical walls and when conditions and sheathing are dry.

NEEDED MATERIALS & TOOLS

NEEDED MATERIALS

- #10 x 2" corrosion-resistant pan head screws must penetrate at least 1" into framing
- Non-compressible shims
- JELD-WEN 6" wide self-adhesive flashing (part #08987) or equivalent (9" if required by local code)
- Sealant (100% polyurethane if painted, 100% silicone if left exposed)
- Backer rod column
- Plastic drain screen with crisscross or woven pattern (sold in 6" widths to protect rain gutters) for step-down landings
- Sheet metal flashing or bendable vinyl sheeting for sill pan (6" wide for 2" x 4" wall, 4" for a continuous slab)
- #8 x 1/2" self-tapping screws for security screws
- For concrete subfloors (securing the sill) 3/16" x 1 1/4" self-tapping concrete screws
- For wood subfloors (securing the sill) #10 x 3" corrosion-resistant pan head screws

Note! Follow all material manufacturers' instructions for proper use and compatibility.

TOOLS

- Cutting shears (sill pan)
- Tape measure
- Utility knife
- Level (4' minimum recommended)
- J-roller
- Caulking gun
- Hammer drill and masonry bits for masonry applications
- Drill with bits
- Putty knife
- Phillips head screwdriver
- Construction stapler

NEEDED MATERIALS & TOOLS - CONTINUED

PARTS (INCLUDED WITH PATIO DOOR)

A Head closer
B Bumper
C Sill closer
D Self-adhesive nailing fin chevron
E Side jamb
F Header
G Sill
H Sill cap
Items not shown:
- Handle set with instructions
- #6 x 1/2" Closer screws
- #8 x 5/8" Bumper screws
- #8 x 3/4" Frame screws
- Operating panel with pre-drilled holes for the handle set
- Fixed panel
- Optional screen door (including lock keeper and screw)

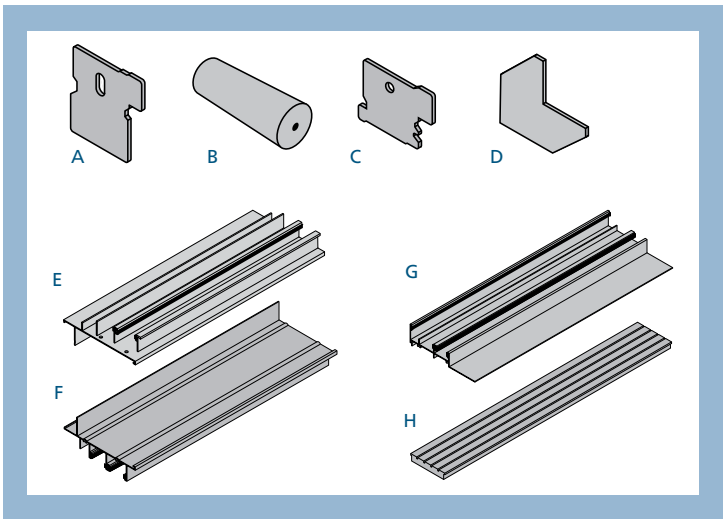

1 REMOVE PACKAGING & INSPECT PATIO DOOR

REMOVE PACKAGING

Remove shipping materials such as corner covers, shipping blocks or pads.

INSPECT PATIO DOOR

- Cosmetic damage
- Correct product (size, color, grid pattern, handing, glazing, energy-efficiency requirements, etc.)
- Splits, bends, holes, missing sections or other damage to the nailing fin longer than 6" and/or within 1/2" of door frame

If any of the above conditions represent a concern, or if you expect environmental conditions to exceed the patio door's performance rating, do not install the patio door. Contact your dealer or distributor for recommendations.

2 INSPECT ROUGH OPENING

- Verify the rough opening is 1/2" wider and 1/2" taller than the patio door frame.
- Verify the rough opening is square. The (A) and (B) measurements should be the same. Maximum allowable deviation from square is 1/4".
- Verify the rough opening is level and plumb (C). The maximum allowable deviation is 1/8".

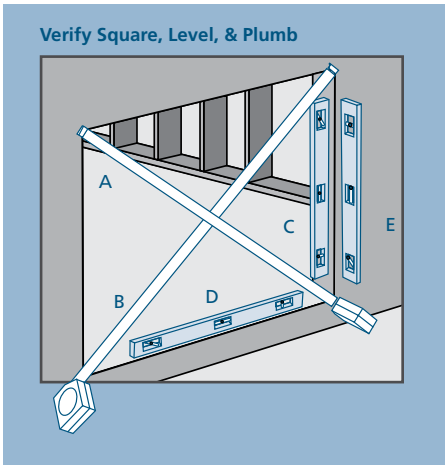

- The rough opening sill must not be crowned or sagged (D).
- The exterior face of the rough opening must be in a single plane (E) with less than 1/8" twist from corner to corner.
- Minimum double studs should be used at all rough openings.
- The header must be supported by trimmer studs.
- Correct any deviations before installing the patio door.

3 ASSEMBLE FRAME

1. Line up the side jamb with the sill. Secure with two #8 x 3/4" frame screws. Screws must engage sill screw channels.
2. Attach the opposite side jamb.
3. Attach header piece in the same manner.
4. Seal the frame members where they connect and all screws as shown.

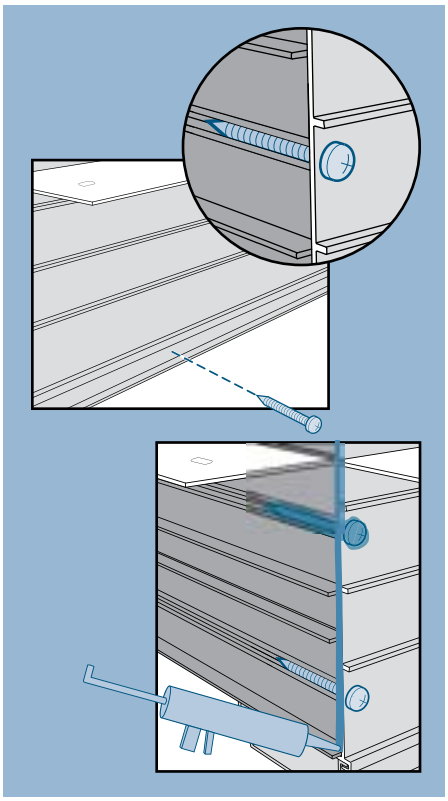

5. Attach two nailing fin chevrons (one on interior side and one on exterior side) to each upper corner of the frame.
6. Cut two pieces of self-adhesive flashing 3" x 3" and apply to the upper corners to seal the triple joint where the header, side jamb and nailing fins meet.

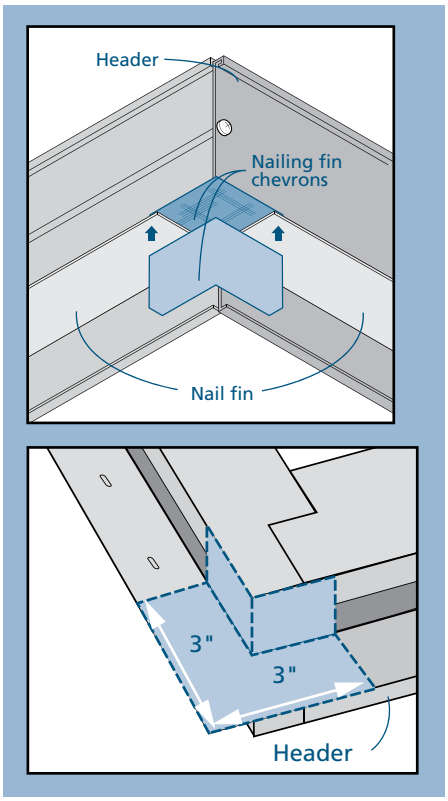

4 PREPARE ROUGH OPENING

FOR RETROFIT INSTALLATIONS

After removing the old patio door, remove sufficient siding to expose at least 9" of intact building wrap. If damaged, apply new building wrap in a shiplap manner. Verify trimmer studs and header are structurally sound. Continue with the instructions.

PREPARE BUILDING WRAP

1. Trim building wrap flush with the edge of the rough opening at the head and sides. Trim flush at the sill for step-down landings.
2. At the head, slit building wrap 6" at 45°. Tape up as shown.

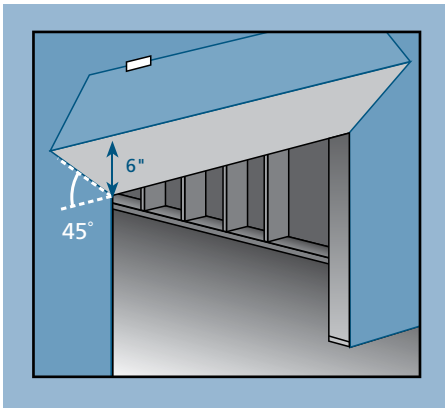

PREPARE SILL PAN

3. Cut a piece of sheet material to the length shown.
4. Lightly crease folding lines 1/2" in from the two short sides and one long side.
5. Measure the distance from the nailing fin to the interior edge of the frame and add 9/16".
6. Take this distance from the back edge and lightly crease a folding line across the sheet material.
7. For step-down landings, cut 1/2" in at this line on both sides of the sheet material.

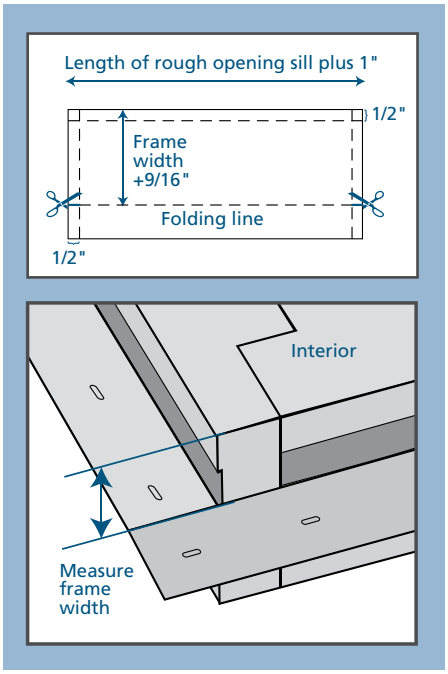

4 PREPARE ROUGH OPENING - CONTINUED

8. For continuous slab, cut across the folding line.

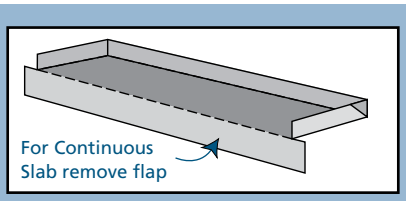

9. Fold the three back sides up to make a 3-sided box, and, for step-down landings, fold the front flap down.

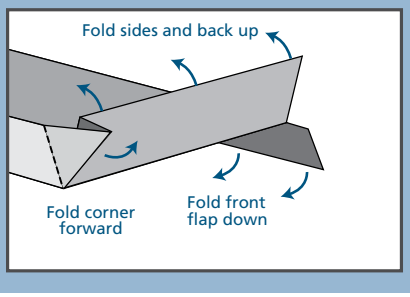

INSTALL SILL PAN

10. Mark a line in the rough opening across the front and back of the sill pan as shown. Remove sill pan and apply three beads of sealant between the marked lines.
11. Set the sill pan in place pressing it down firmly into the sealant. Use a J-roller if necessary to ensure a smooth, secure seal.
12. Apply spray adhesive/primer to the sill area. Follow manufacturer's instructions for application methods.

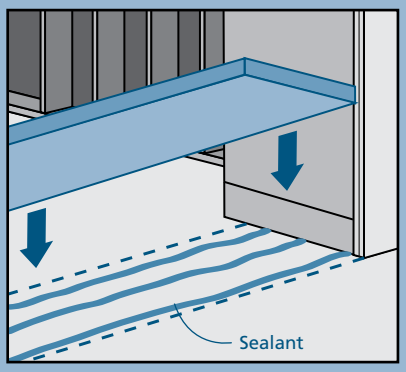

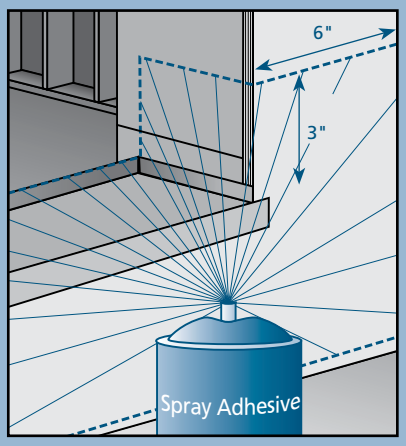

13. Cut a piece of JELD-WEN self adhesive flashing the length of the sill and apply over the sill pan as shown. The bottom of the sill pan should be completely covered by the self-adhesive flashing.

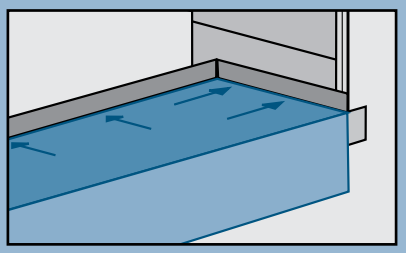

14. Cut two pieces of JELD-WEN self adhesive flashing 6" wide and the sill pan width + 3" long.
    a. For continuous slab landings only, cut out the inside corner.
    b. Adhere the pieces of flashing to the inside corners.
15. Smooth gaps or bubbles beneath self-adhesive flashing with a J-roller (remove and replace if necessary).
16. Seal back corners of sill pan with sealant.
17. For step-down landings only, cut plastic drain screen to length of sill + 2" and staple 1/2" below sill edge. The drain screen provides a path for air to dry any incidental moisture in the rough opening.

Self-Sealing Corner Flash

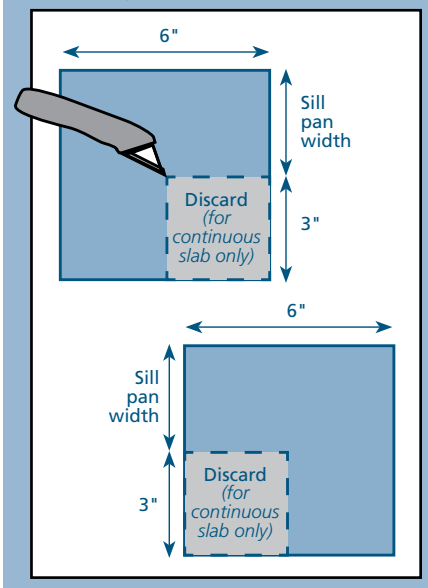

Step-Down Landing

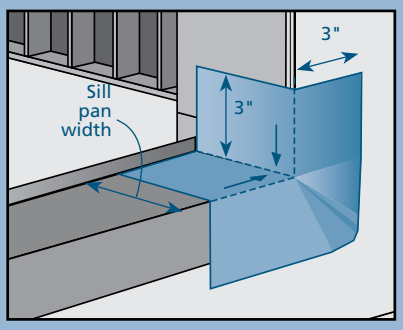

Continuous Slab Landing

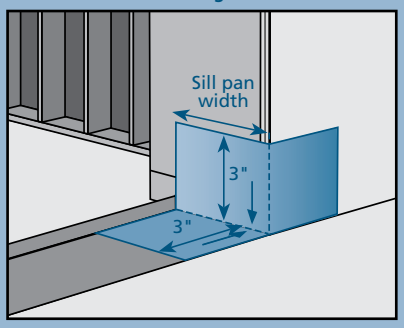

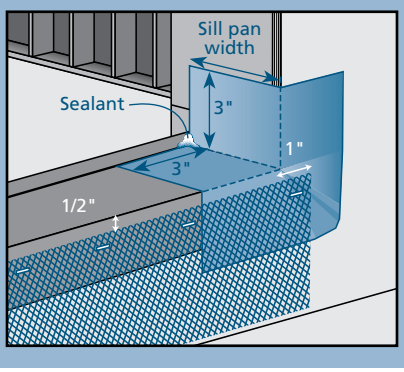

5 INSTALL FRAME

Warning! To avoid injury, use at least two people to install.

Note! These steps apply to both landing types.

1. Apply a 3/8" continuous bead of sealant across the sill pan back dam.
2. Tilt patio door frame into the rough opening (if using a sill pan, make sure the back of the door makes solid contact with the sealant). Adequately support the door until fully installed.
3. Fasten patio door frame with a #10 x 2" screw through the nailing fin 3"–7" from one lower corner.

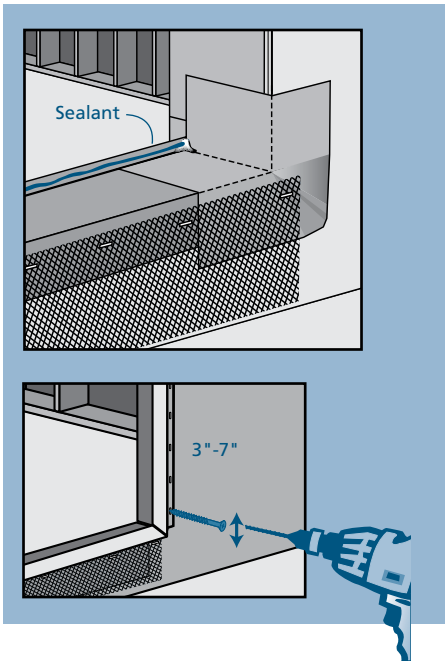

SHIM THE JAMBS

Note! Secure all shims with sealant. Apply sealant to screw threads before driving through shims.

4. On the interior, vertically shim both side jambs at center and 3"-6" from each corner.
5. Inspect the door frame for square, level, and plumb (remove and reinstall if necessary).
6. For vertical shims at center, drive screws through the upper screw holes in the interior channel of the side jamb. For all other shim locations, pre-drill for screws. Drive screws through every shim in the rough opening.
7. Fasten the nailing fin around the frame 3"–7" from the corners and at maximum 16" intervals in between.

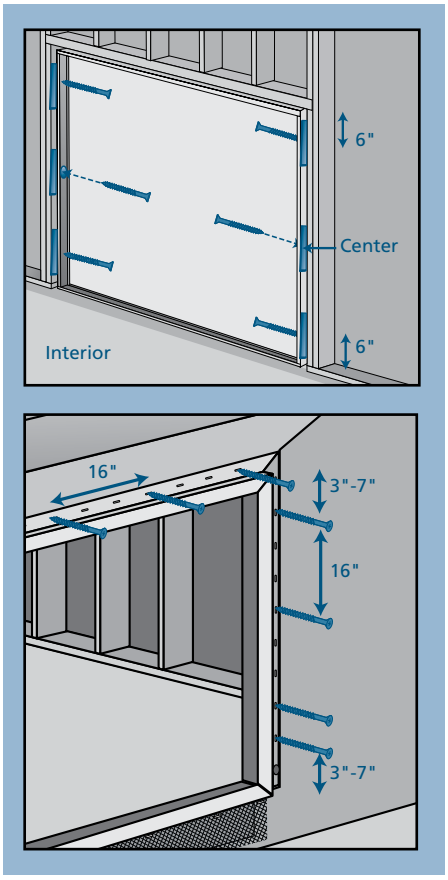

SECURE THE SILL

8. At the center point, pre-drill the interior sill track.
9. Fill the hole with sealant.
10. Drive a screw through the sill into the framing or concrete. Use concrete anchors in concrete floors.
11. Cover the top of the screw with sealant.

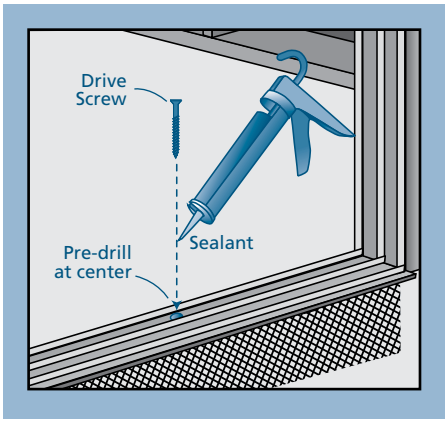

6 FLASH PATIO DOOR

CUT FLASHING TO LENGTH

1. Cut pieces of self-adhesive flashing to length as follows:
   - One header piece 14" longer than the header
   - Two side pieces 5" longer than the sides for continuous slab landings; or 5" + the height of the step, for step-down landings
   - For step-down landings only, one sill piece 10" longer than the sill and 1" narrower than the height of the step

SPRAY ADHESIVE/PRIMER

Note! Protect patio door from overspray

2. Apply spray adhesive to the nailing fin, sheathing, and building wrap around the patio door as shown.

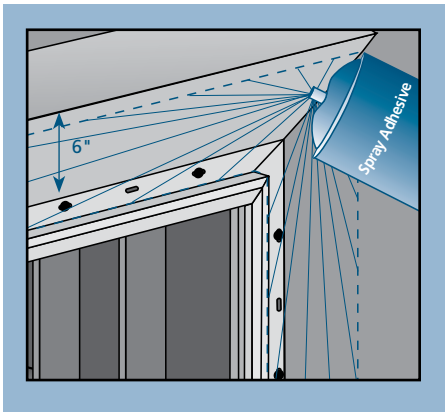

APPLY THE SELF-ADHESIVE FLASHING IN THIS ORDER

Note! Keep the edge of the self-adhesive flashing as close to the patio door frame as possible.

3. If applicable, center and apply the sill piece underneath the sill (bottom 1/2" of the drain screen must remain visible).
4. Apply the side pieces starting 5" above the header.
5. Center and apply the header piece above the header.
6. Press the flashing down with a J-roller.

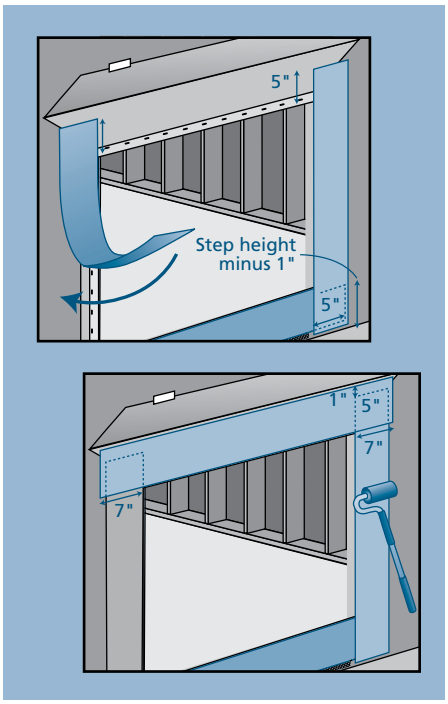

7 INSTALL PANELS

INSTALL THE OPERATING PANEL

1. From the exterior, install the operating panel by tipping the top of the panel into the interior header track and swinging the bottom into the interior sill track.
2. Install the handle set using the instructions provided.
3. Adjust the operating panel rollers as follows:

Note! Adjusting the rollers too high may allow water and/or air infiltration. Adjust the rollers just high enough to clear the sill track without dragging.

- Open the operating panel enough to compare with the side jamb.
- Adjust both rollers until the gap is even and the door rolls smoothly.

4. At vertical center of side jamb interior track, pre-drill/install bumper.

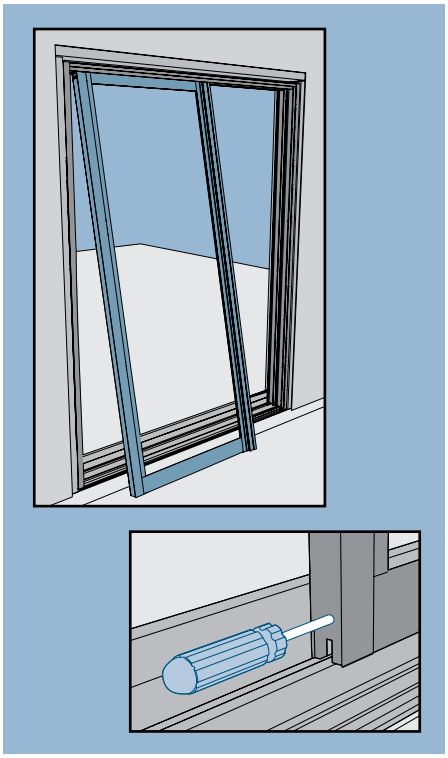

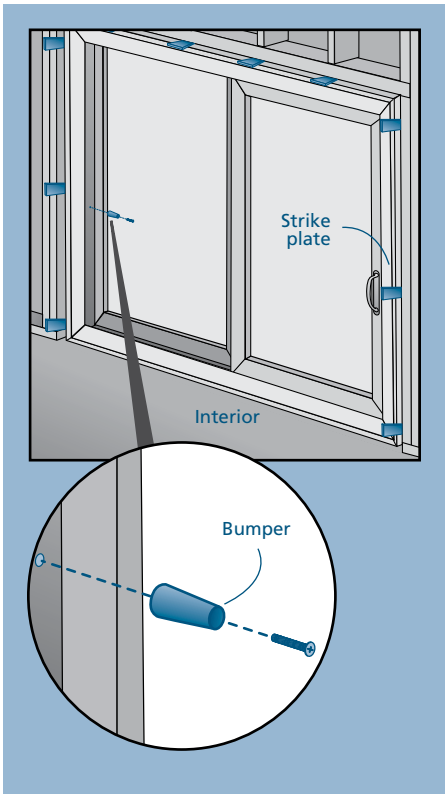

7 INSTALL PANELS - CONTINUED

INSTALL THE FIXED PANEL

5. From the exterior, install the fixed panel in the exterior track in the same manner as the operating panel.
6. Close the fixed panel. Install head and sill closers with #6 x 1/2" closer screws.
7. Install sill cap.
8. From the interior, drive #8 x 1/2" self-tapping security screws through the side jamb, weatherstrip, and then into the fixed panel. This will fasten the panel to the jamb for added strength and security.

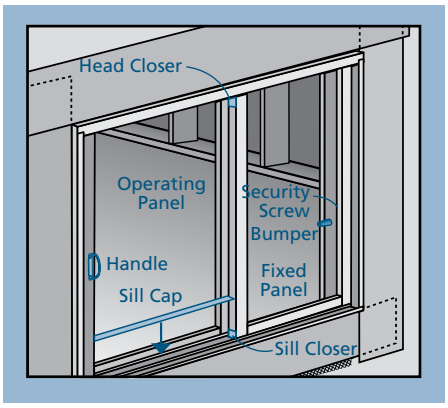

INSTALL THE SCREEN (IF INCLUDED)

9. Adjust rollers all the way up into the screen door.
10. Install the screen into the screen track.
11. Adjust rollers to achieve smooth operation.

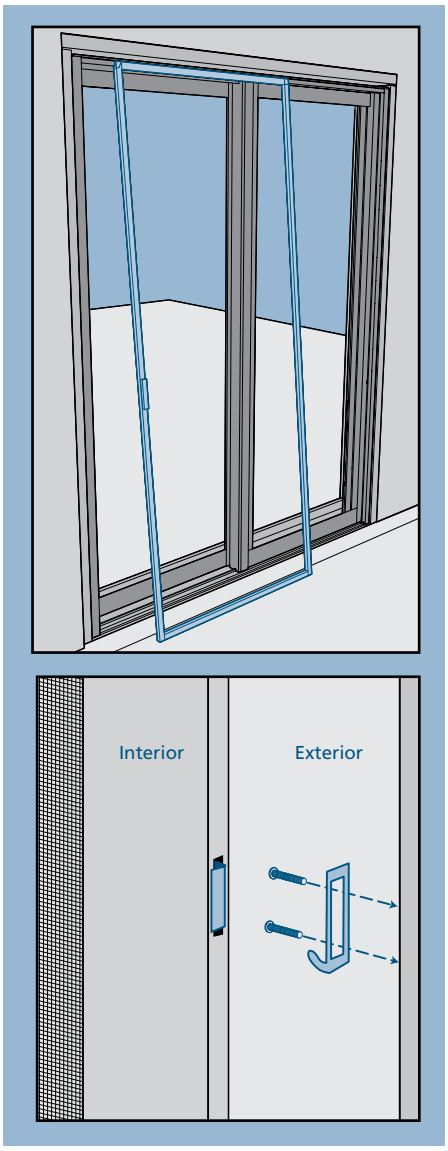

12. Pre-drill and install lock keeper in the side jamb as shown.

RELIABILITY *for* real life®

8 COMPLETE INSTALLATION

1. On the interior of the door, install backer rod and sealant between the frame and rough opening.
2. Ensure sealant on back dam of the sill pan fully seals to the inside face of the sill. Apply more sealant as necessary.

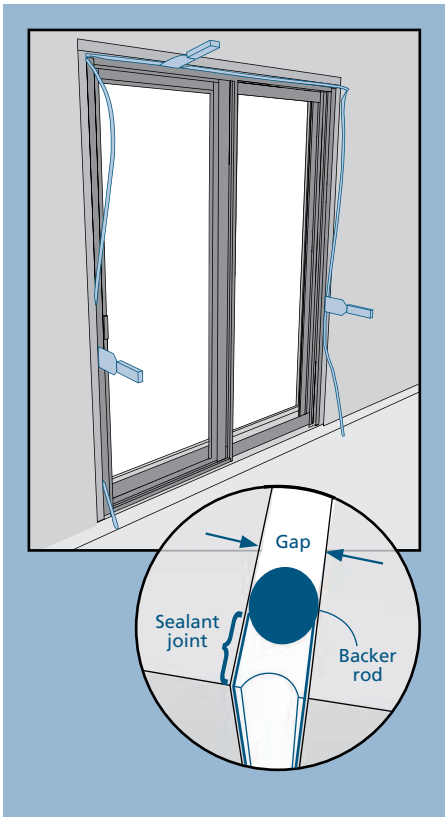

3. For continuous slabs, on the exterior, apply a 1/4" bead of sealant around the sill where it meets the slab. Leave 1" gaps 4"-6" from corners as shown. Leave additional 1" weep gaps at each interlock, or every 4', whichever is less. For step-down landings, fully seal under the patio door sill.

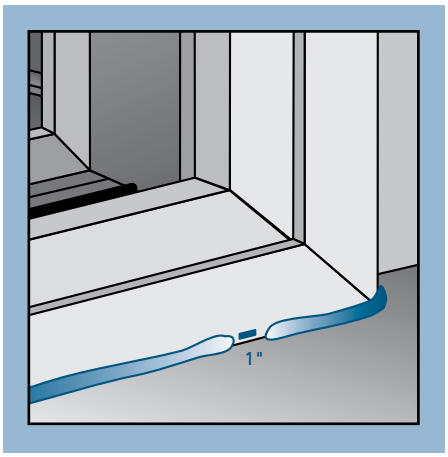

INSTALL SUPPORT TRIM (STEP-DOWN LANDING ONLY)

4. On the exterior, install support trim underneath the sill where it extends over the landing. Position trim snugly against the bottom of the sill toe.

AFTER INSTALLATION

5. Install exterior wall surface within seven days of patio door installation.
6. Maintain gap of 1/4"-3/8" between door frame and final exterior wall surface (siding, stucco, etc.). Fill this gap with sealant.
7. Protect recently installed units from damage from plaster, paint, debris, etc. by covering the unit with plastic.

Please visit jeld-wen.com/resources for warranty and care and maintenance information.

Thank you for choosing

© 2008 JELD-WEN, inc. | JELD-WEN and Reliability for real life are registered trademarks of JELD-WEN, inc., Oregon USA.
All other trademarks are the property of their respective owners.

(01/08)